# 使 用 说 明 书

# User manual

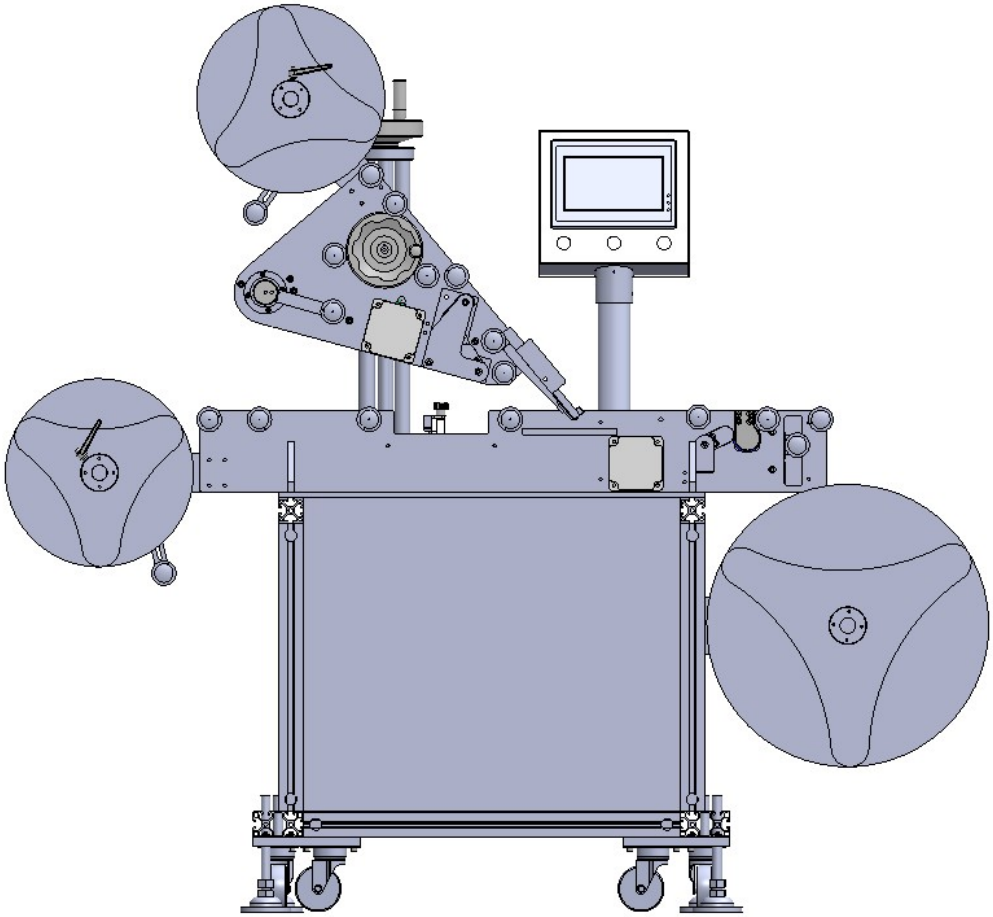

## 设备名称：全自动卷膜贴标机

## Automatic Film Rolling Converting machine

## 设备型号：IVF_D11100

## Model: IVF_D11100

# 目　　录

# Directory

**第一部分 郑重声明 Part I Statement**

一、常规事项 Regular Item ..... .....3

二、厂家权限 Supplier Rights .....3

三、安全事项 Safety Items.....4

四、操作权限 Operation Rights.....4

五、操作环境 Operation Environment .....5

六、磨合期 Tune-in Period .....5

**第二部份 产品介绍 Machine Introduction**

一、基本用途 Basic function.....6

二、适用范围 Application Scope .....6

三、技术参数 Technical parameters.....6

**第三部分 机构部分 Mechanism Part**

一、整机视图 Machine Overview .....7

二、局部视图 Partial Overview .....8

**第四部分 控制系统 Control System**

一、触摸屏画面 **Touch screen display** .....12

**第五部分 常见故障及解决方案** .....17

# 第一部份　郑重声明

# Part I　Statement

## 一、常规事项

Regular Items

1、本贴标机只具备单标贴标功能，具体参考操作部分章节。

This converting machine has the functions of single converting only. For details, refer to operation chapter.

2、贴标机属于非标设备，其操作需要一定的技术水平。操作水平高低，影响到设备的高效使用。

Converting machine is non-standard equipment and needs certain technique to operate it. The level of the technician affects the efficiency of the machine.

3、操作本设备需要按照说明书中指示进行，或在我司技术员指导下进行。

The operations of this equipment should be accord with the instruction manual or under the instructions from the technicians from the supplier.

4、该技术手册专用于 D11100 全自动卷膜贴标机（以下简称贴标机）。其目的是为了保证专业的使用和调整该设备。

This instruction manual is applied to D11100 Automatic film rolling converting machine (Abbreviation is converting machine in the following sections.).

## 二、厂家权限

## II. Supplier Rights

公司保留以下权利：

Company reserves the following authorities:

1、进行机构部件、电控元件以及软件的更改升级，也包括所用部件的规格和品牌，以保持产品技术的先进性，但并不承诺对以前交付产品免费进行更改。

Update for mechanical parts, electro-control components and software, including the type and brand of the components used, in order to maintain the technical advantages of the machine, but free update for the purchased machine is not promised.

2、我司具有设备完整性保障的权限，缺少厂家技术员指导的情况下，不得私自对设备的机械结构或电气部件进行修改，如违反此规定引起的损坏由修改方负责。

Our company has the rights to require that the machine being kept integrally. Without the technical instructions from the equipment supplier, the modifications to the mechanical or electrical parts are not

allowed. The related damages should be paid by the party which violated the rule.

3、在本设备基础上，增加其他功能，我司提供配置的技术指导，但无需对配套的设备负责。

Our company provides related technical instructions for adding code or other functions based on this machine, but not responsible for the related components.

4、我司对本设备和本操作说明书具有知识产权，如有抄袭，须承担法律责任。

Our company reserves the intellectual property right of this machine and this instruction manual. Any plagiarism must bear legal liability.

## 三、安全事项

## III. Safety Items

1、危险！务必保证有地线的情况下使用，防止触电。

Danger! Make sure the machine is earthed to the ground to prevent electrical shock.

2、危险！务必确保电压不过载。

Danger! Make sure the voltage is not overloaded.

3、警惕！电箱部分，线路部分需有电工指导下方可操作。

Warning! The operations to the electrical boxes and circuits should be under the instructions from electrical technicians.

4、警惕！转动部位需要特别的留意，防止压伤。

Warning! Pay attention to the rotating parts to prevent compression crush.

## 四、操作权限

## IV. Operation Rights

- 确保只有受过培训的及有权限的人操作、布置和维护该设备。

  Make sure operation, location and maintenance of this machine by trained and authorized personnel.

- 仅允许有资格的人、专业人员、和设备工程师去完成布局。

  Only allow certified or professional personnel and equipment engineer to accomplish the layout.

- 操作机器需要确保：

  Operation to the machine needs to make sure:

  ——操作人员应得到厂家的专业培训合格后进行。

  -----Operator is trained professionally and certified by our company.

  ——操作的人员须具备修复或处理设备操作运行过程中所出现的基本异常知识。

  ------Operator has the knowledge to repair or deal with malfunctions during the process of the machine

operation.

——在设备使用过程中，请按规定的要求作业。

------Work according to the requirements in this manual in the operation to this machine.

## 五、操作环境

## V. Operation Environment

请不要在以下环境中使用：

Do not operate the machine under following environments:

• 温度变化激烈的地方

Severe temperature variation

• 湿度过高而产生露水的地方

Humidity or high moisture

• 振动或冲击很强烈的地方

Intensely vibration and shock

• 粉尘多的地方

Too much dust

• 有水、油、化学药品飞溅的地方

**W**ater, oil and chemicals spray

• 有易爆、易燃危险物品的地方

Explosive, flammable, and dangerous things

## 六、磨合期

## VI. Tune-in Period

本贴标机是根据客户产品特别订做，并非标准产品，且对操作人员有技术和经验要求，需要有一个月左右的磨合期。磨合期内，设备的操作方面，达不到技术参数方面的情况，需要及时向厂家反映，以获得技术支持。

This converting machine is manufactured based customer’s products specifically and is not standard equipment, has technical and experience requirements to operators, and needs one month duration to tune in.

# 第二部分 产品介绍

## 基本用途：

## Basic purposes:

可用于各种规格的卷料物体贴标，如布卷、纸卷、标签卷等，配备平面贴标功能；可配备色带打码机，喷码机，贴标同时打印生产批号等信息。

Can be used for various specifications of material object converting, such as cloth roll, paper roll, label roll, equipped with flat converting function;Can be equipped with color tape printing machine, inkjet code machine, label and print production batch number and other information.

## 二、适用范围：

## Application Scope

＊适用标签：不干胶标签，不干胶膜，电子监管码，条形码等；

Applicable Label: anti-dry labels, anti-dry film, electronic supervision code, bar code, etc.;

＊适用产品：要求在卷状物料展开后的平面上贴附标签的产品；

Applicable products: Products that are required to be labeled on the surface of the rolled material after it has been unfolded;

＊应用行业：广泛应用于食品、医药、日化、电子、五金、塑胶等行业；

Applicable industry: widely used in food, medicine, daily-chemical, electronics, hardware, plastic industries and etc.

＊应用实例：RFID 贴标等。

Application examples: RFID tags, etc.

## 三、技术参数：

## Technical parameters

＊贴标精度：±1mm（不含产品、标签误差）；

Converting precision: ±1mm (Errors of products and labels are not included.);

＊贴标速度：10～30 米/分钟（理论值，与产品、标签尺寸以及操作水平有关）；

Converting speed: 10～30m /min. (Theoretical value, has to relate with product and label dimension and level of operation);

＊适用产品尺寸：标签底纸宽度 20-150mm.

Applicable product dimensions: Label backing width 20-150mm

＊整机尺寸：1600×700×1450mm（长×宽×高）；

Dimension: 1600 × 700 × 1450mm (L × W × H);

＊ 适用电源：220V 50/60HZ；

Power supply: 220V 50/60HZ;

＊ 整机重量：100Kg。

＊ Weight: 100KG

# 第三部分 机构部分

# Mechanism Part

## 整机视图

## Machine Overview

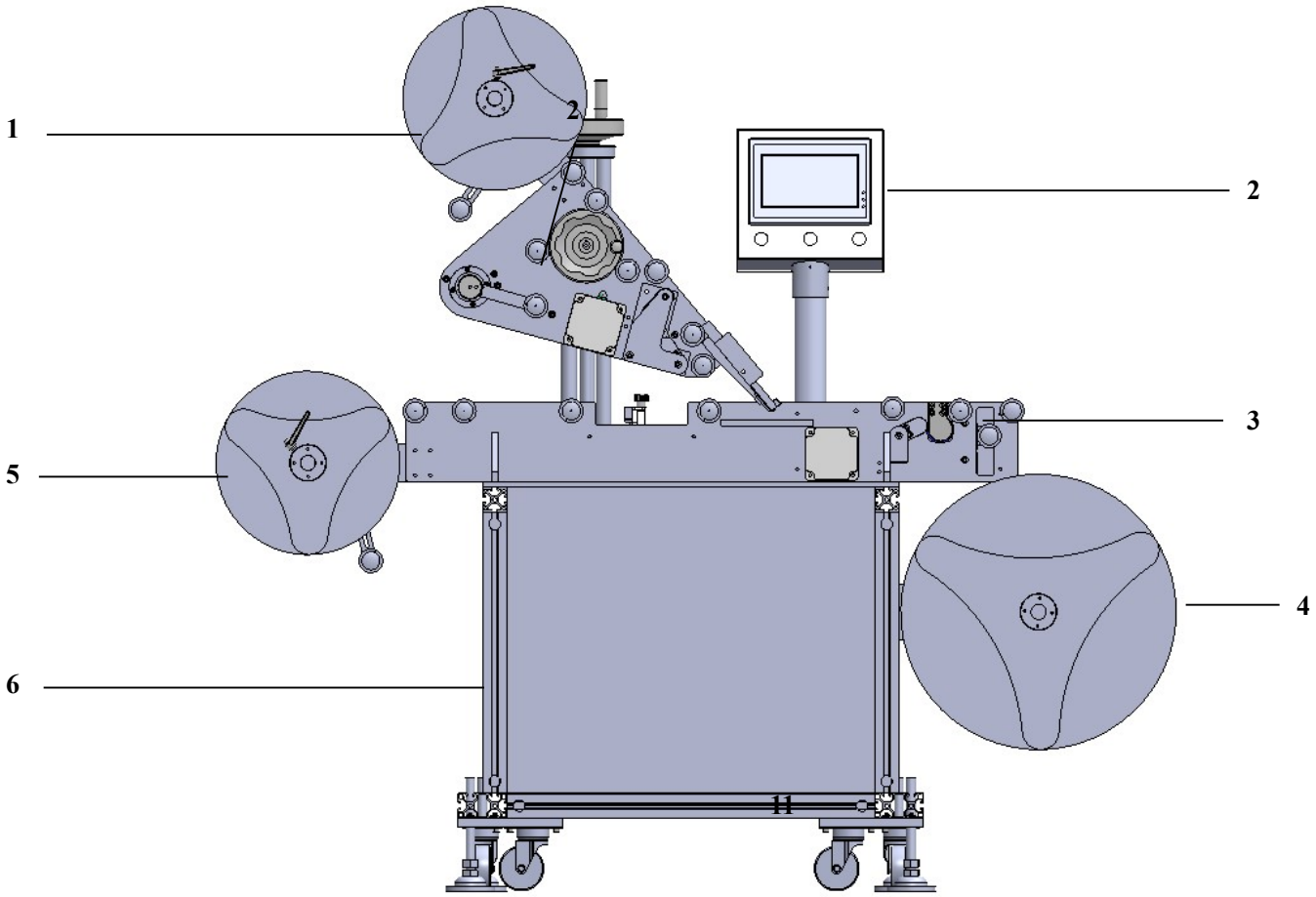

**1、 贴标机构：**用于放标签卷料，对产品进行贴标。

Converting agency: used for putting label coil material and converting products.

**2、触摸屏机构：**实现人机对话功能。

Touch screen: man-machine dialogue function.

**3、产品牵引机构：**用于牵引产品均速放卷。

Product traction mechanism: used for coiling the product at a uniform speed.

**4、收卷机构：**用于对已经贴好标签的产品进行重卷。

Rewinding mechanism: used for rewinding products that have been labeled.

5.产品放卷机构： 用于原料放料。

Product unwinding mechanism: used for feeding raw materials.

**6、控制电箱：**用于整机电气控制电路的安装。

Control electrical box: used for the installation of electrical control circuit.

## 二、局部视图

Partial view

**贴标机构：** Converting institutions

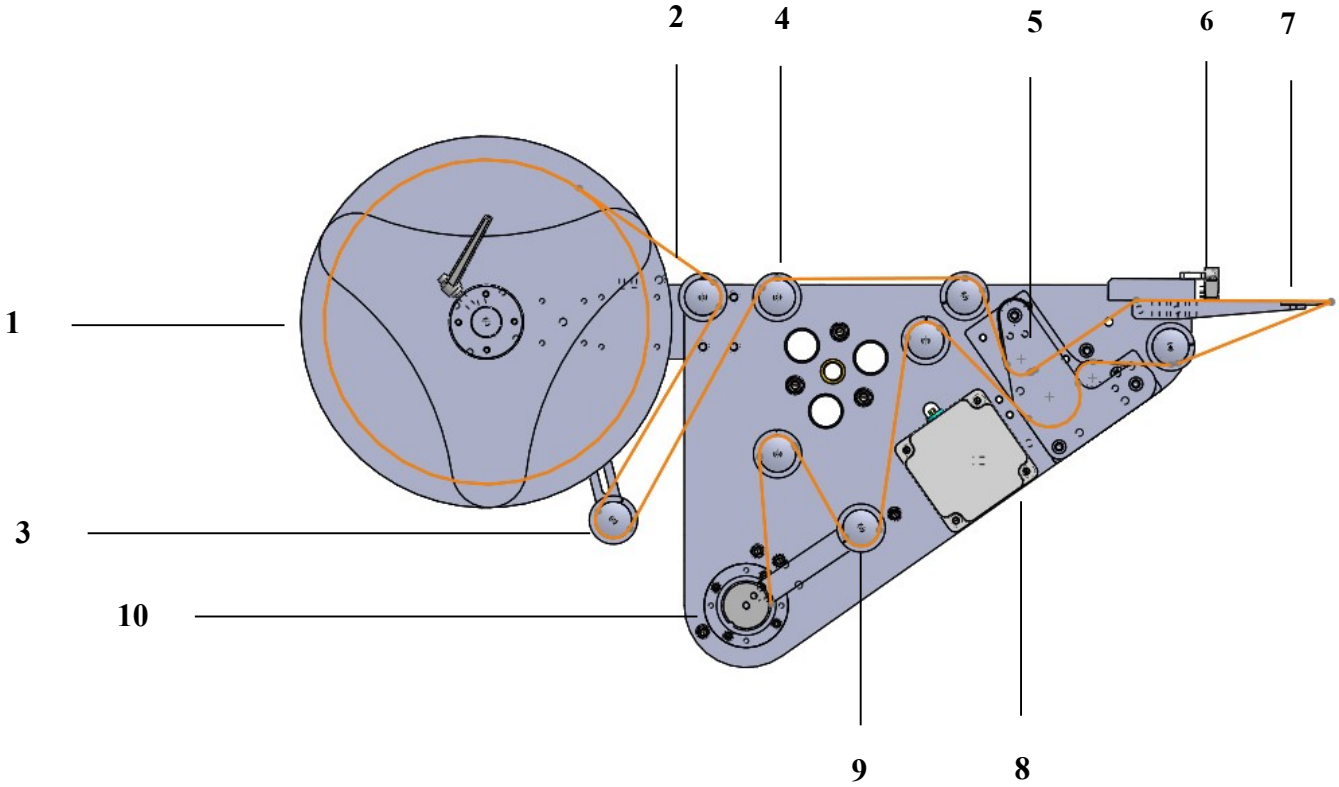


**1：料盘：用于存放标签。**

Tray: used for storing labels.

**2：标签：用于贴到底部产品上。**

Label: for attaching to bottom product.

3、刹车滚筒：用于将料盘停止转动及保证标签张力。

Brake roller: used to stop the rotation of material disc and ensure the tension of label.

4、绕标滚筒：用于限定绕标路径。

Winding drum: used to define winding path.

5、牵引机构：用于拉动标签匀速运动。

Traction mechanism: used to pull the label in uniform motion.

6、标签传感器：用于检测标签位置，控制标签停止位置。

Tag sensor: used for detecting tag position and controlling tag stop position.

7、剥标板：用于将标签从底纸中分离出来。

Stripper: used to separate the label from the backing paper.

8、牵引电机：提供动力给牵引机构及收底纸机构。

Traction motor: provide power to traction mechanism and backing paper mechanism.

9、缓冲滚筒：用于电机快速启动时的抖动缓冲。

Buffer drum: used for jitter buffer when the motor starts quickly.

10、收底纸机构：将剥离掉标签后的底纸进行回收。

Backing paper: peel off the label of the backing paper for recycling.

## 绕标图

**Label winding chart, as mentioned the number sequence on machine itself**

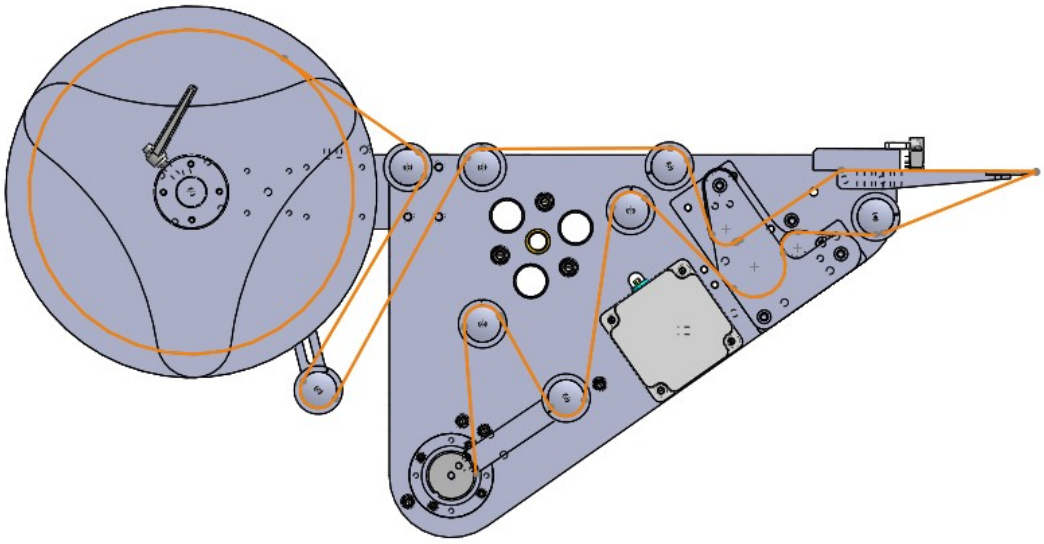

**底膜机构：**

Basement membrane institutions, **as mentioned the number sequence on machine itself**

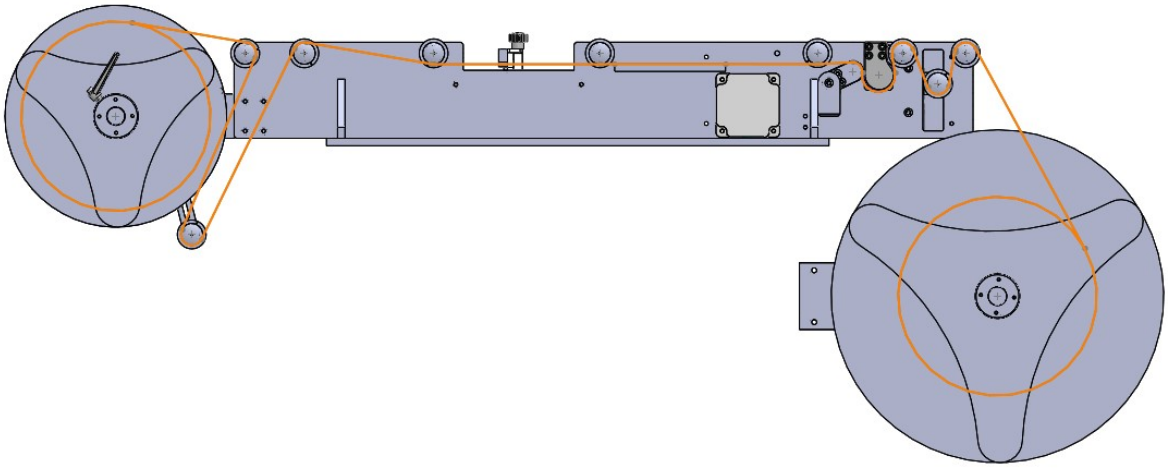

## 调整机构：

Adjustment mechanism:

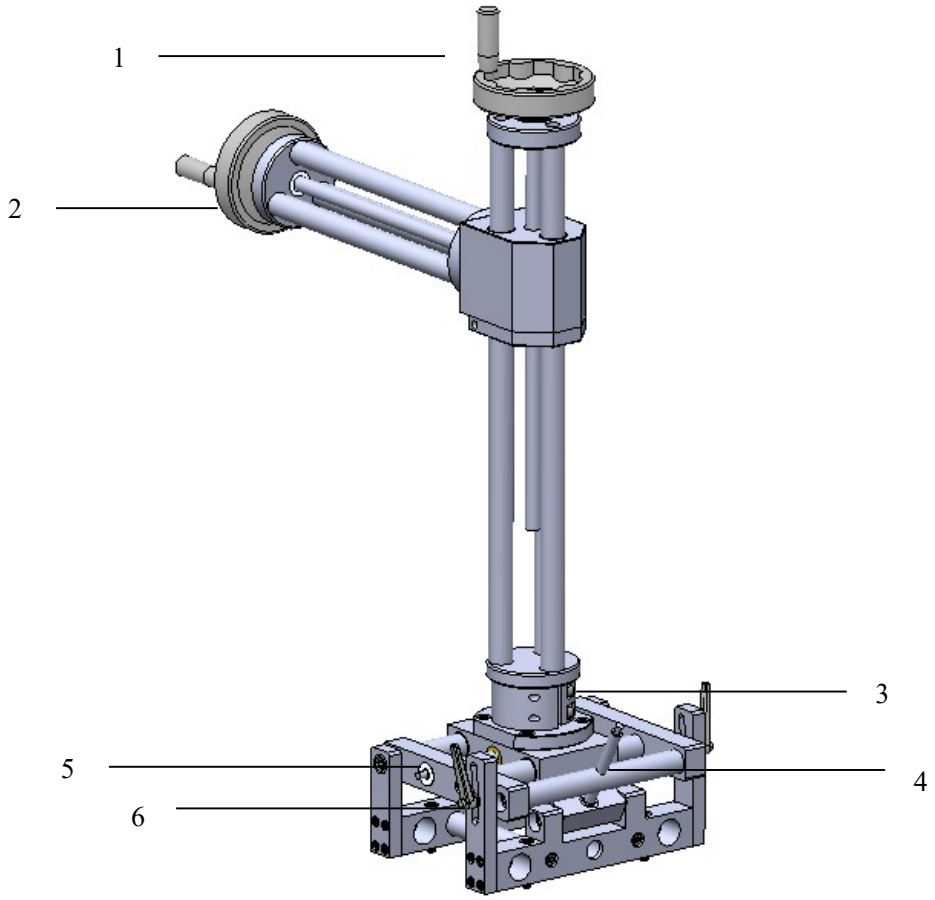


1、 上下调整手柄：用于调整标头高低位置。

Up-down adjustment handle: used for adjusting the height and height of the head.

2、 前后调整机构：用于调整标头前后位置。

Front and rear adjusting mechanism: used for adjusting the front and rear position of the header.

3、 平面旋转角度调整锁紧块：松开后可调整标头平面旋转角度。

Plane rotation Angle adjustment locking block: the rotation Angle of the header plane can be adjusted after loosening.

4、 高低角度调整手柄：用于调整标头高低角度。

High and low Angle adjustment handle: used for adjusting the high and low Angle of the marking head.

5、 左右调整手柄：用于调整标头的左右位置。

Left and right adjustment handle: used for adjusting the left and right position of the header.

6、 高低角度调整锁紧块：用于调整高低角度后锁紧位置。

Lock block for adjusting high and low Angle: it is used for adjusting the lock position after high and low Angle.

# 第四部分 控制系统

# Control System

**一.触摸屏画面：**

**Touch screen display**

**开机画面:**（如下图所示）

**Machine start screen: (as shown below)**

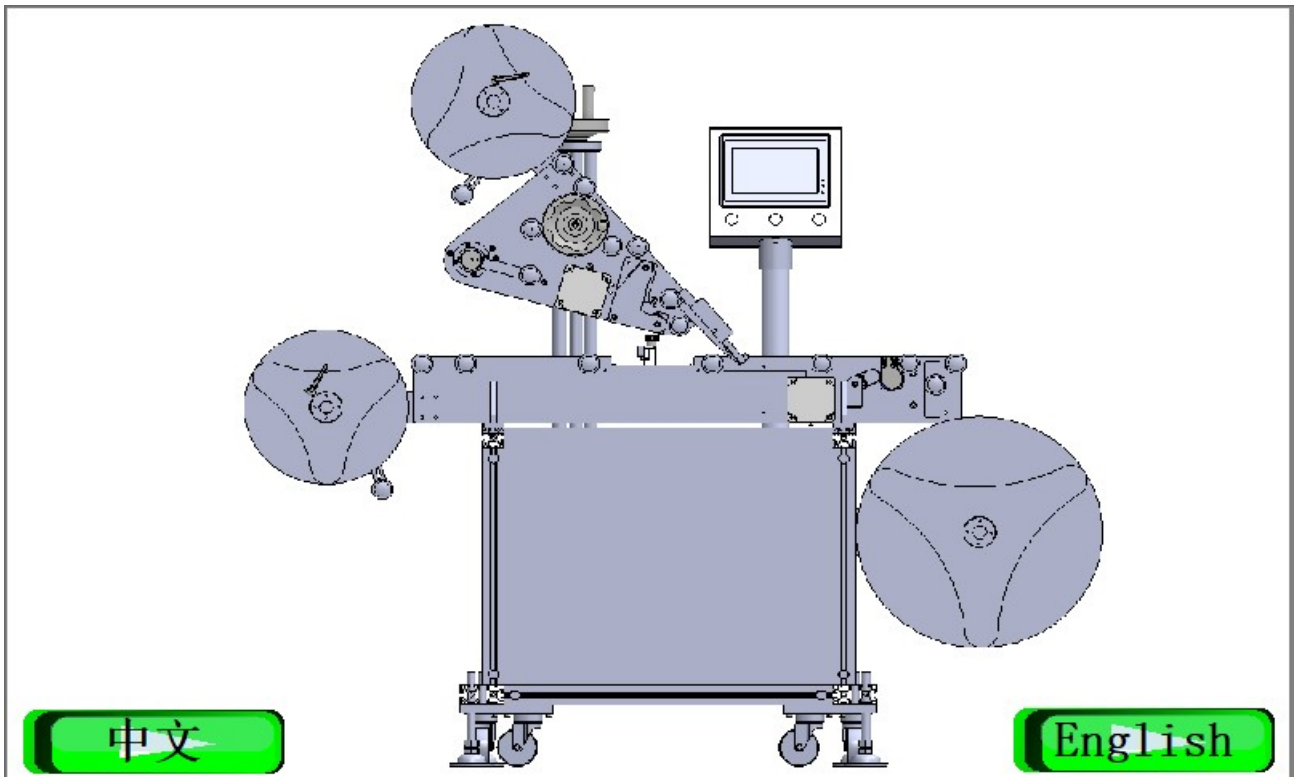


**1、 点击“中文”按钮进入中文操作界面。**

Click the "Chinese" button to enter the Chinese operation interface.

**2、 点击“English”按钮进入英文操作界面。**

Click the "English" button to enter the English operation interface.

自动画面

Automatic interface

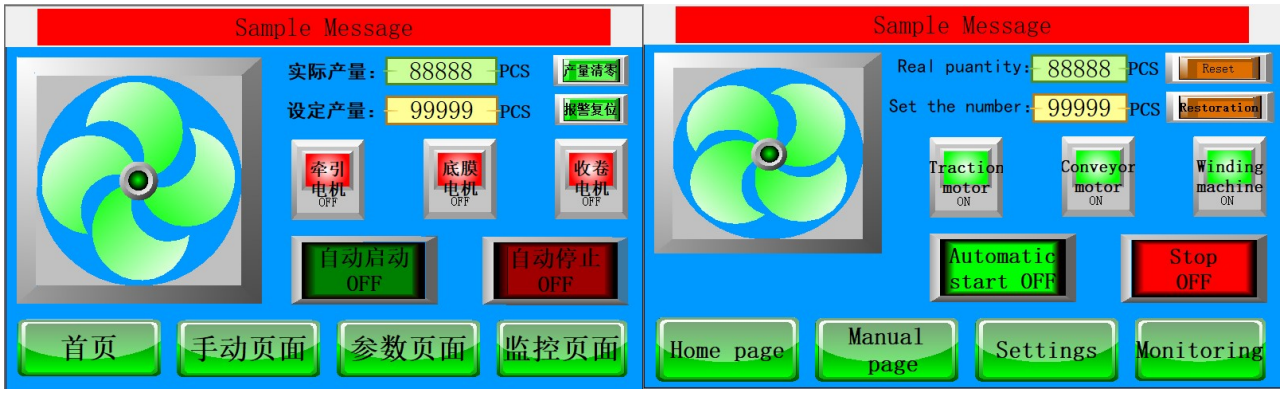


1、Sample Message:显示当前设备状态。

Displays the current device status.

2、实际产量：显示当前的生产数量。

Real quantity: shows the current production quantity.

3、 设定产量：设置需要生产的数量。

Set the number: Set the quantity to be produced.

4 、产量清零：对当前已经生产的数量进行清除。

Reset: Purge the current production volume.

5、 报警复位：解除当前的报警，设备恢复正常。

Alarm reset: remove the current alarm and the equipment returns to normal.

6、 牵引电机：自动启动时可选择启动或关闭。

traction motor: automatic start can choose to start or close.

7、 底膜电机：自动启动时可选择启动或关闭。

Conveyor motor: automatic start can choose to start or close.

8、收卷电机：自动启动时可选择启动或关闭。

Winding machine: automatic start can choose to start or close.

9、自动启动：按下后，设备开启。

Automatic start: press down, the device starts.

10、自动停止：按下后，设备停止。

Automatic stop: press down, the device stops.

手动页面：

Manual page

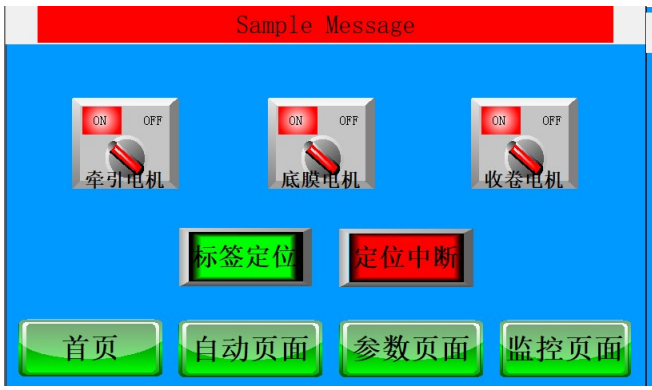


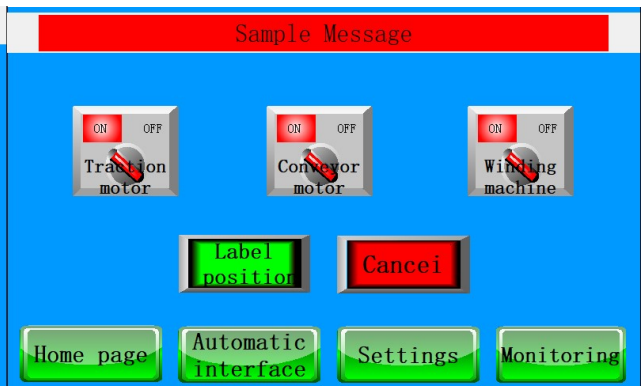


1、牵引电机：按下后，牵引电机持续转动。

traction motor: After pressing down, the traction motor keeps rotating.

2、底膜电机：按下后，底膜电机持续转动。

Conveyor motor：Press down, the bottom film motor continues to rotate.

3、收卷电机：按下后，收卷电机处于开启状态。

Winding machine: Press down, the winding motor is in open state.

4、 标签定位：按下后，标头自动出一张标，用于调试时使用，调整贴标时的停标位置。

Label positioning: after pressing down, the label head will automatically issue a label, which can be used in debugging and adjust the stop position when converting.

5、 标定位中断：按下后，正在工作的标签定位操作被中断。

Calibration bit interruption: after pressing down, the working label positioning operation is interrupted.

**参数设置：**

Parameter setting:

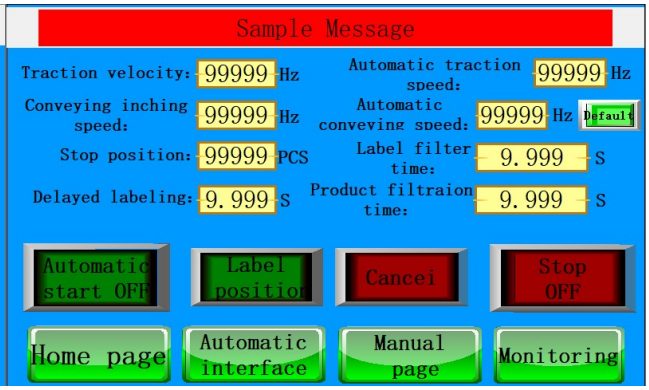


1、 牵引手动频率：用于调整手动牵引标签时的速度。

Traction velocity: For adjusting the speed of manual label pulling.

2、 牵引自动频率：用于调整设备自动运行时的速度。

Automatic traction speed: Used to adjust the speed of automatic operation of equipment

(recommendation is 2000hz-5000hz for Fastag project).

3、 底膜手动频率：用于调整手动牵引底膜时的速度。

Conveying inching speed: Used for adjusting the speed of manual traction of the bottom film.

4、 底膜自动频率：用于调整底膜（被贴卷状物料）的运行速度。

Automatic conveving speed: It is used to adjust the running speed of the bottom film.

5、 默认：用于选择底膜自动或手动匹配标头速度。当显示“默认”时，底膜自动匹配标头的速度，不需要调整。当显示“指定”时，为手动调整底膜与标头速度匹配。

Default: used for selecting substrates to automatically or manually match header speed.When "default" is displayed, the bottom film automatically matches the speed of the header and does not need to be adjusted.When "specified" is displayed, adjust the substrates to match the header speed manually.

6、 停标位置：用于调整标头机构标签停止位置，单位为脉冲数。

Stop position: used for adjusting the stop position of the label of the head mechanism, the unit is the number of pulses.

7、 贴标延时：调整标头出标的时间，通过调整出标时间来改变贴标位置，单位为秒。

Converting delay: adjust the marking time of the header, and change the converting position by adjusting the marking time, in seconds.

8、 测标过滤时间：用于解决同一张标签出现多个信号时对贴标的影响，一般设定的时间不超过单张标签通过的时间。

Test filter time: it is used to solve the effect of multiple signals on converting in the same label, and the time generally set is not more than the time for the single label to pass.

9、 测物过滤时间：用于解决同一个产品出现多个信号时对贴标的影响，一般设定的时间不超过单个产品通过的时间。

Filtration time of test objects: it is used to solve the effect of multiple signals on converting of the same product. Generally, the time set shall not exceed the time of passing of a single product.

# 第五部分 常见故障及解决方案

5th Part - FAQ

1、 **设备无电：** The equipment has no electricity

- 检查工厂电源是否正常。 check whether the power supply of the factory is normal.
- 检查电箱断路器是否断开。 check whether the circuit breaker of the electrical box is disconnected.
- 检查熔断器、开关电源是否损坏。 check whether the fuse and switch power are damaged.

2、 **设备无法启动：** The device cannot start:

- 检查触摸屏上产量是否达到设定值？若达到设定值，则需要按触摸屏上的“清零”来恢复。当生产数量达到设定产量导致机台停止运作，只需点击产量清零，然后重新点击自动启动。计数器必须清零否则可能无法工作 check whether the output on the touch screen reaches the set value?If the set value is reached, you need to press the touch screen "reset" to restore. Machine reach the setting value will be stopped. So need counter reset or counter setting again, outside of setting the device is pending

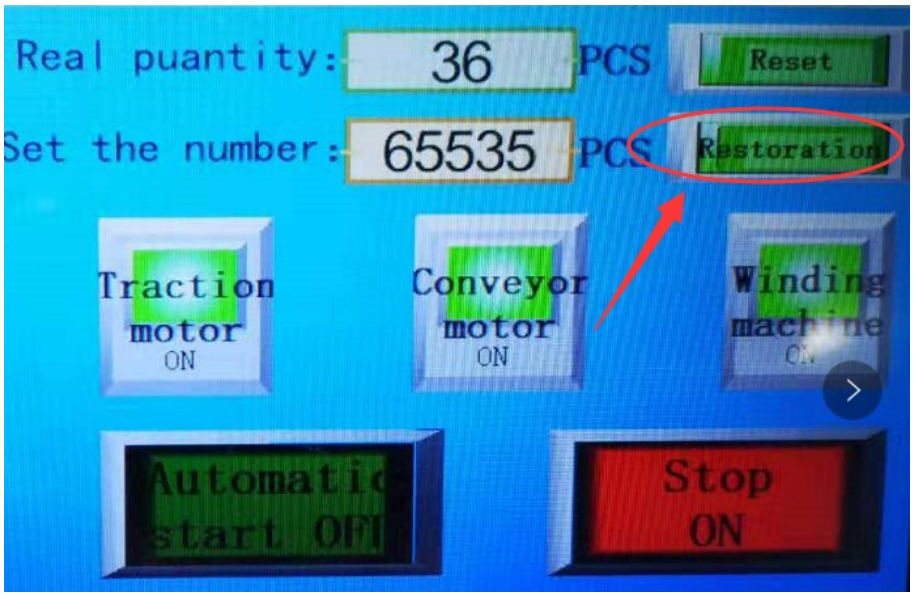


- 检查触摸屏上是否有报警？如有，则需要按下“报警复位”按钮，解除报警。 check whether there is an alarm on the touch screen?If yes, press the "alarm reset" button to remove the alarm.

3、 **连续出标或不出标。 continuous traction or not traction labels.**

- 检查传感器是否损坏？ check whether the sensor is damaged?
- 检查传感器是否调整正确？是否能正常检测？ check whether the sensor is adjusted correctly?Is it

normal to test?

4、 标签断开。 Label disconnect. (Not allowed reel tape with connection)

- 检查绕标是否正确？绕标时标签是否平行平整？

check whether the winding is correct? Is the label flat when winding?

- 检查标签自身质量是否有问题？比如：底纸切伤。

check whether there is any problem with the label's own quality.For example: a cut in the backing paper.

- 贴标的产品不允许有接头以及不能是半断过的产品，允许缺标，如果出现接头导致断裂，需停止生产，将断裂处重新对接并将接头位置拉过至底纸回收处。

Now allowed the labels with connection or perforation, missing label is allowed. If liner break, need to stop machine and reconnect again by tape, the connection area must be pull back to the tractor knife.

5、 机器维护及定时测量精度 Maintenanence & accuracy confirmation

- 每天生产前需清理机台，擦拭滚轴，以免影响贴标精度。

  The converting machine must be cleared all the time before production, otherwise the low precision and rejection will be appeared

- 批量生产过程中需要每隔一段时间测量一下跳距，确认是否有偏位。如出现上下偏位，转动机台正面的圆轮使产品居中。如出现跳距偏位，先检查抓点位置是否准确，再检查待贴标产品停顿位置是否有变化。（偏位在±1MM 是正常公差）

  Regularly the accuracy is +/-1mm, more accuracy will required less speed, insure the precision, please track all the time pitch distance between labels step by step before mass production. While high speed is implemented, the pitch maybe also changed, double check and fine tune is quite necessary.

- 生产过程发现位置左右偏移时，转动感应器进行微调。跳距偏大时数值往大的转，跳距偏小时数值往小的转。

  Fine tune the sensor position will change the converting pitch, more value more distance

- 参数界面中，除牵引自动频率外，其它均为不可动参数。在计数器的右侧可以点击移除传感器警报。

Remove alerts from sensor notice see below picture, please noted any parameters are not allowed to be changed except the traction speed

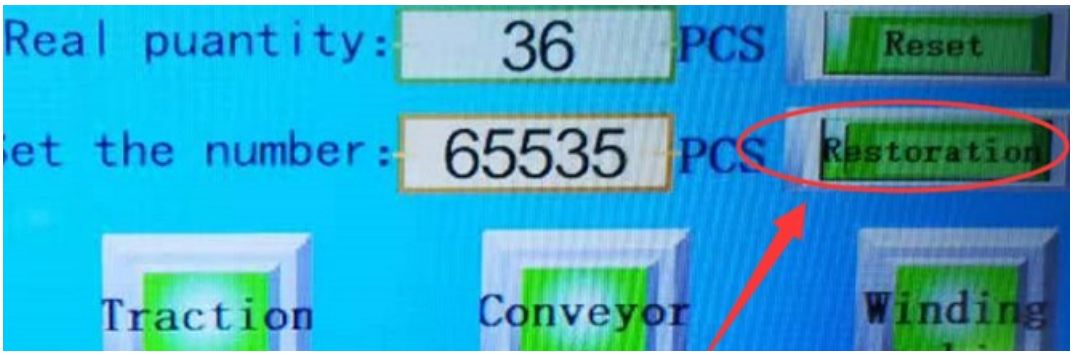


- 传感器监测调整 Sensor Monitor for adjustment!

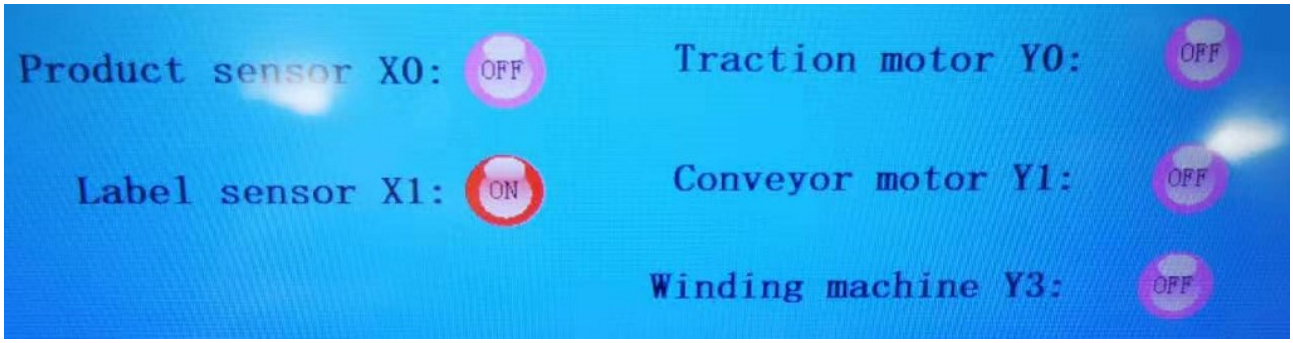


6、 机器默认配置 Default Configuration & Parameters

Counter default setting & Alarm restoration/reset

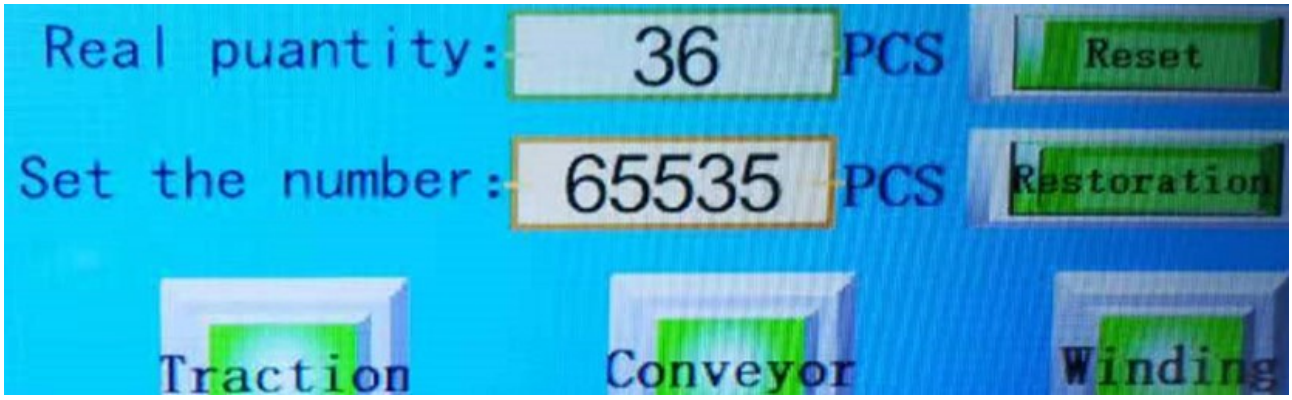


Motor parameter default setting

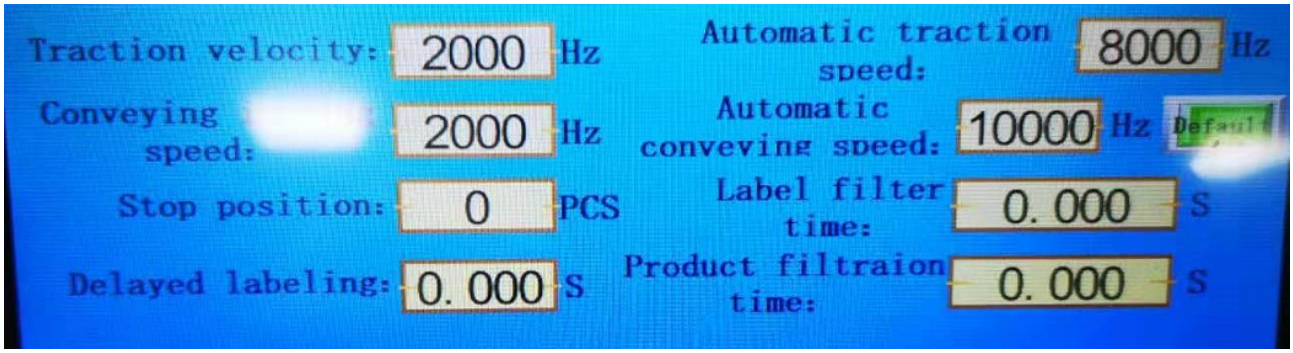

Default Micro-switcher Setting For Motor Drivers

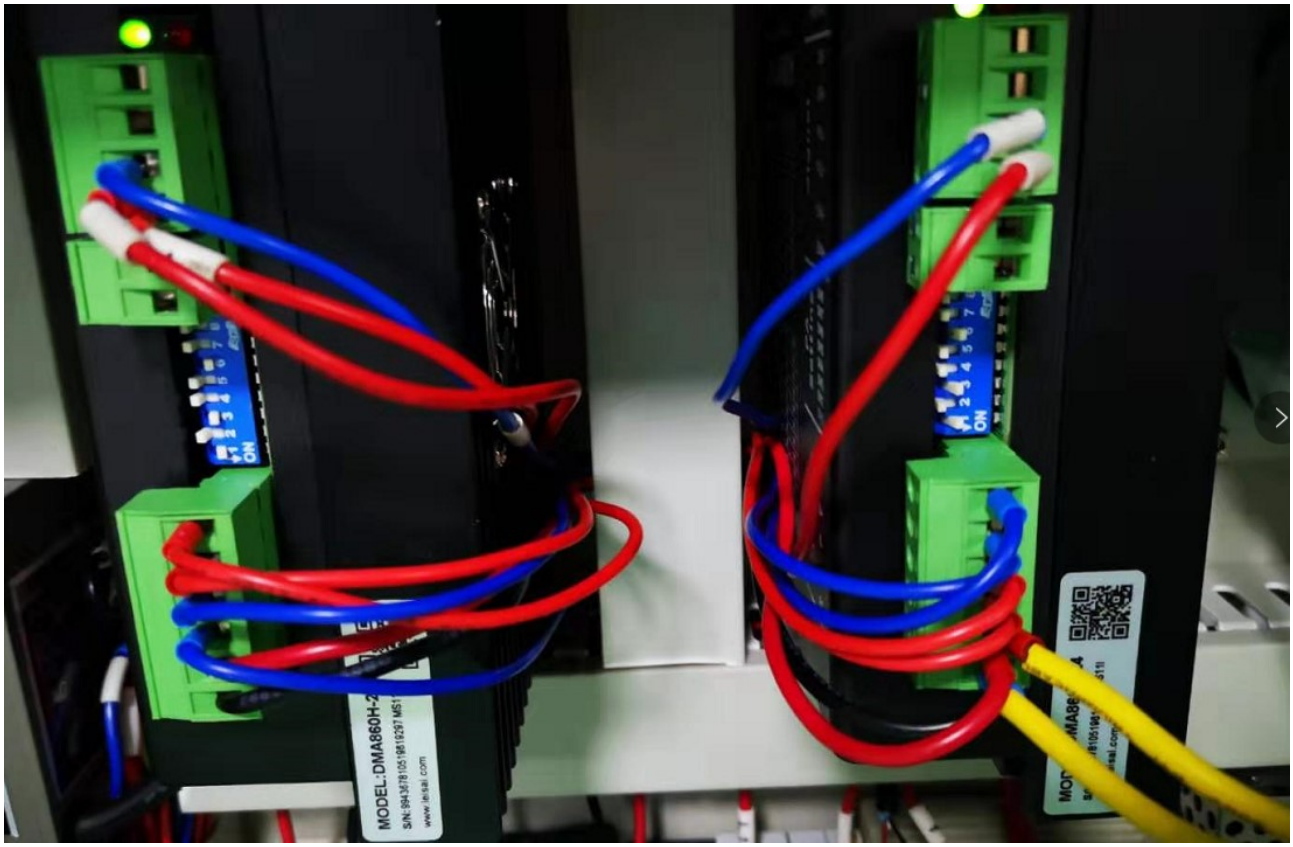

# 基本操作步骤

# Quick Instruction

1. 打开电源，首界面选择对应的语言。之后跳转的界面中将牵引电机、底膜电机、收卷电机三个都打开。

Power on – Traction Motor/Conveyor motor/Winding machine all are on

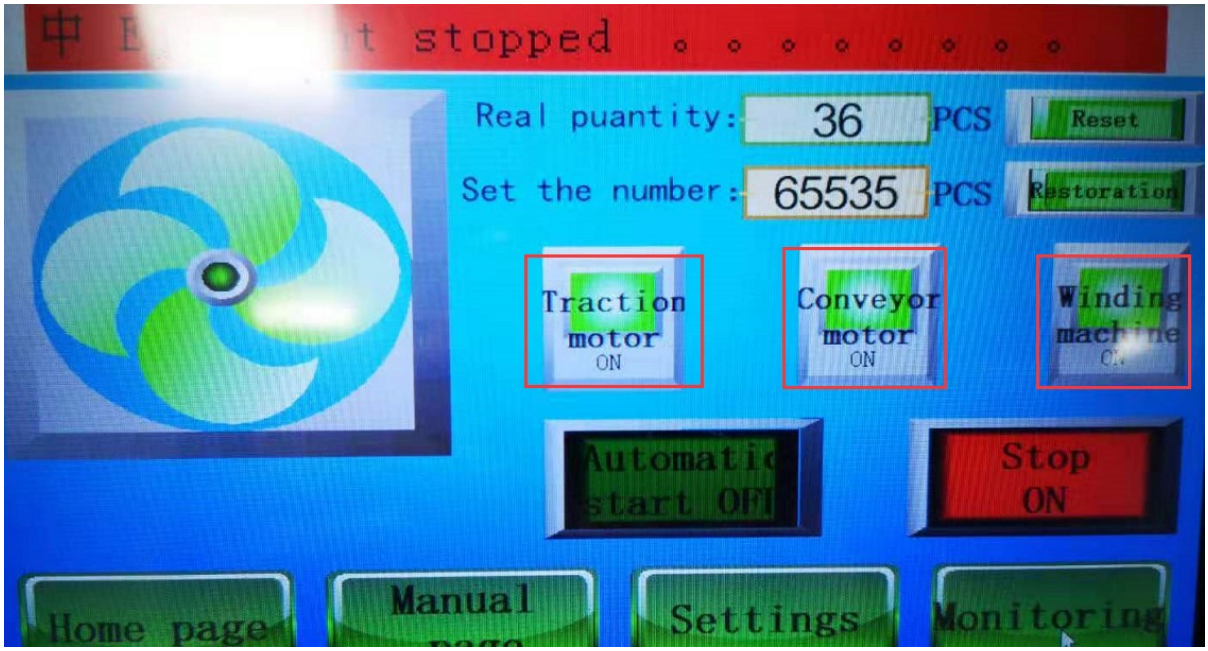


2. 待贴标的底膜产品按照编号顺序穿好卡好位置，卡位要卡好以免走料过程中跑位。

Follow the number sequence, put basement material on the right position and lock them properly

3. 感应指示灯的调试。感应灯由两部分组成。第一部分为抓停，即感应到就不会走标。第二部分为抓动，即感应到就会走标。首先调整好待贴标产品停顿的位置，需确保每次停顿的位置都一样（用手动页面中的标签定位可检测）。然后按照所需跳距调试走标感应器的位置。

Sensor adjustment, with metal sensor just make sure the light will be on while aluminum part of label was found With label sensor, focus on label area, make sure the light will be on and other area the light will be off, press one time button and move label out of sensor and press one more time, repeat this process for adjustment.

4. 在操作界面点击参数页面，将牵引自动频率调至 2000Hz。点击自动启动让机台自动贴几个后点击自动停止，然后用直尺测量跳距是否是我们所需跳距以及跳距是否等距。如确定可以，可将牵引自动频率调高（最高为 20000Hz），再继续测试跳距是否有变化。确定无变化后点击自动页面，开始批量生产。

Before mass production, we highly suggest you changing the “automatic traction speed” to be smaller nearby 2000hz as well, While adjustment was done properly, the highest speed can be upto 5000hz, not more than 8000hz in case of high accuracy and prevent rejection or missing converting.

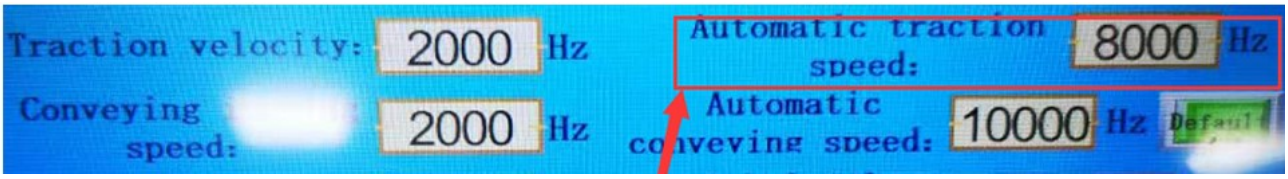


5. 出标位置说明及相关产能 The right position of Traction Knife as below picture mentioned in "Length" for both of Wet Inlay and for Facestock label

- **Wet Inlay Operation: (Check RED Markers)**

Metal sensor: at fine tune meter 8mm

Length = 100mm

Capacity: 2pcs/second, Upto 7200pcs/h with frequency 4000hz

- **Facestock Label Operation: (Check Black Markers)**

Metal sensor: at fine tune meter 7mm

Length = 90mm
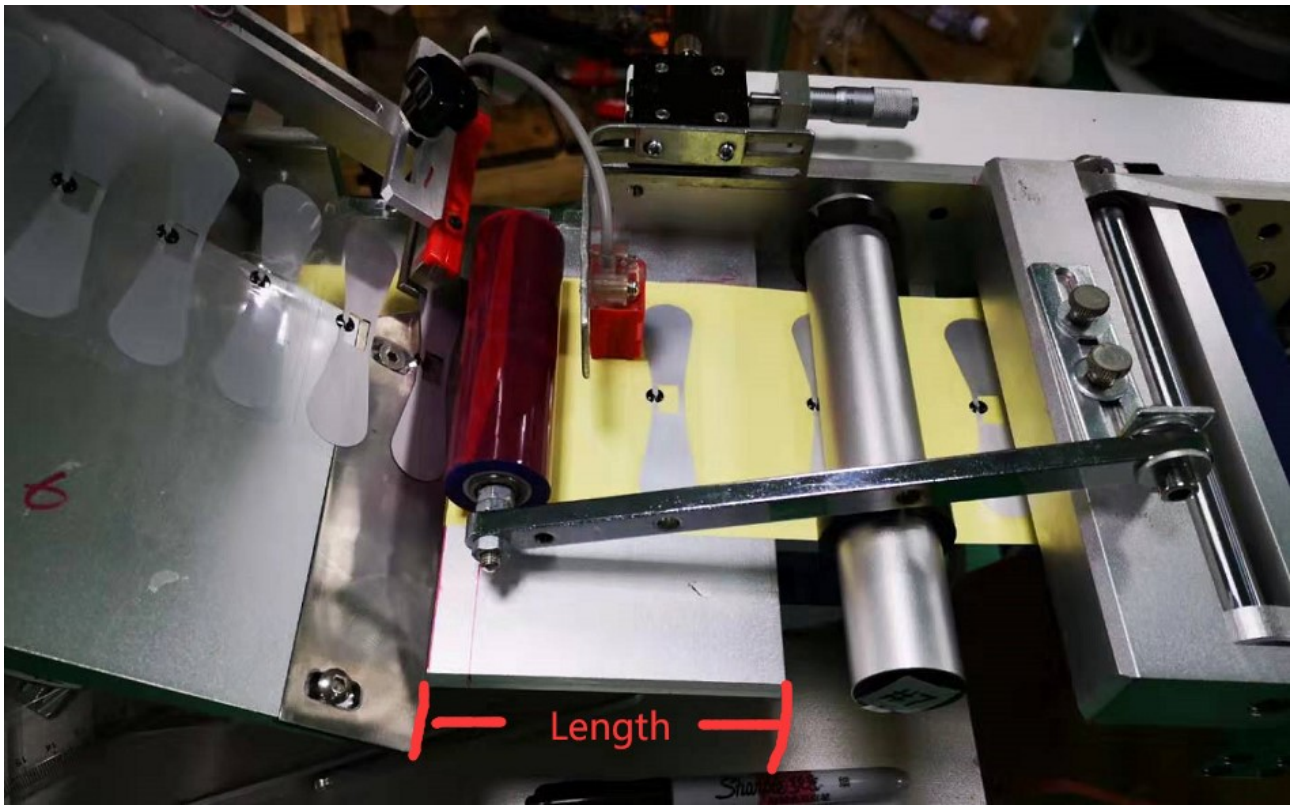
Capacity: 1pcs/second, Upto 3600pcs/h with frequency 4000hz